Combining Algebraic and Side Channel Attacks on Stream Ciphers

Asif Raza Kazmi† Mehreen Afzal† Muhammad Faisal Amjad‡ Adnan Rashdi†
College of Signals, National University of Sciences and Technology, Pakistan
Email: †{asifkazmi.msis14@students.,mehreenafzal@,adnanrashdi@}mcs.edu.pk ‡faisal@nust.edu.pk

***Abstract*—A cryptanalysis technique can be termed successful if its complexity is better than brute force attack, even though it may not be practically feasible due to high complexity. However, it is a proven fact that combining different type of attack techniques in past has paid dividends with regards to overall complexity. We, in this paper propose novel idea of combining algebraic and side channel attacks on stream ciphers. Algebraic cryptanalysis has a high cost when pitched against stream ciphers with nonlinear update and for side channel attacks, adversary needs to have a continued access to cipher's implementation. On the other hand combining both these attacks can overcome their individual shortcomings to a great extent, thereby making it practically feasible. Algebraic and side channel attacks have been earlier combined on block ciphers, but no work on applying such attacks against stream ciphers has been published so far.**

Keywords: Algebraic attack, Side channel attack, Algebraic side channel attack, Stream ciphers, Cryptanalysis.

I. Introduction

In algebraic cryptanalysis technique, adversary transforms the cipher into a system of multivariate polynomial equations called MQ problem. Solution of MQ problem leads to knowledge of unknown variables which can be key bits in case of block ciphers and secret key or internal state in case of stream ciphers. However solving set of multivariate polynomial equations is itself NP-hard problem. Few popular methods to solve MQ problem are relinearization [1], extended linearization [2], extended sparse linearization [3], Groebner bases [4] and Boolean satisfiability (SAT) solving.

Nonlinearity in the construction of a cipher makes it highly resistant against algebraic attack. In case of block ciphers, the chief source of nonlinearity are s-boxes, whereas in case of stream ciphers, nonlinearity can be designed in feedback functions of state register(s) and filter / combiner functions. Courtois introduced fast algebraic attacks against stream ciphers in 2003 in [5] which further reduced the complexity of algebraic attacks, however Courtois attacks particularly exploited stream ciphers with linear feedback. On the other hand, today's popular stream ciphers mostly rely on nonlinear feedback shift registers (NLFSRs). In [6] authors observed that after obtaining approximately 80 equations while applying algebraic cryptanalysis of Grain stream cipher, the degree of equations rose to as high as 160. Generally complexity of algebraic attacks against popular stream ciphers is way too high to call it *computationally feasible*, therefore mostly such attacks are either on reduced variants of the ciphers or eased with few guessed bits. For example, best known complexity of algebraic attack against Bivium-B stream cipher (a reduced variant of Trivium) is $2^{36.5}$s [8]. Algebraic attack complexity against 625-round reduced Trivium stream cipher in [10] is $2^{42.5}$s and against only LFSR bits of Grain stream cipher in [11] is 2^{63}s.

This paper proposes that complexity of MQ problem, derived from algebraic attack technique against any stream cipher, can be reduced considerably, if additional information obtained from side channel analysis of target cipher's implementation is added into it in the form of algebraic equations. With regards to stream ciphers, algebraic attacks and side channel attacks, as yet, are only applied independent of each other.

Application of side channel attacks against stream ciphers (or block ciphers) depend on cipher's design, implementation and underlying platform. In [12] authors showed that all stream ciphers of eSTREAM project were susceptible in one way or the other towards side channel analysis. Examples of successful side channel attacks against Trivium stream cipher can be studied in [13], [14] and [15]. Grain stream cipher has also been subjected to successful side channel attacks in [13] and [15]. However side channel analysis require continued access to the hardware implementation of the cipher, which may not be practical.

It is demonstrated in this paper that for reducing the complexity of MQ problem generated from algebraic attack, only partial side channel information from the cipher's implementation can prove fruitful. Instead of aiming for a complete secret key or state recovery, side channel attacks, in this case, can be mounted only for obtaining partial information in few leakage measurements. Template attack, a form of side channel attack, introduced by Chari et. al in [16] can be applied to gain maximum possible information while accessing the target device for minimum possible time. However side channel attack techniques, other than template attack can also be used to target limited leakage information.

Motivation: Foregoing in view, our motivation for proposing the novel idea of combining algebraic and side channel attacks on stream ciphers emanates from following:

- High complexity of lone algebraic attacks against popular stream ciphers makes them almost impractical [6].
- Obtaining side channel leakage information from stream cipher implementation in a single or few traces is possible / practical [16].

978-1-5090-5984-3/17/$31.00 ©2017 IEEE. Personal use of this material is permitted. Permission from IEEE must be obtained for all other uses, in any current or future media, including reprinting/republishing this material for advertising or promotional purposes, creating new collective works, for resale or redistribution to servers or lists, or reuse of any copyrighted component of this work in other works.

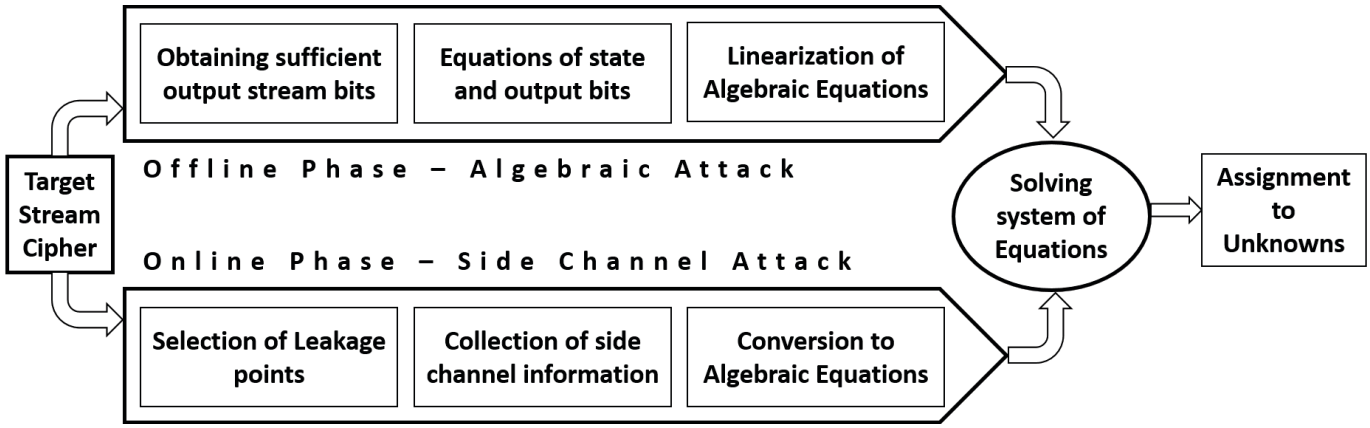

Fig. 1: Attack Model

- Success of combining algebraic and side channel attacks on block ciphers has already been proven [7].

Contribution: Following contributions are made in this paper:

- Proposing novel idea of combining algebraic and side channel attacks on stream ciphers.
- Presenting a generic attack methodology for mounting above mentioned attacks on stream ciphers.
- Demonstrating the proposed concept by applying it against a hypothetical stream cipher.

Document Structure: The rest of this paper is organized as follows: Section II deals with the related work. Our proposed attack model is explained in Section III and its application on a hypothetical stream cipher is demonstrated in Section IV. Section V concludes the paper and proposes future work in this research area.

II. Related Work

As no published work exists on combining algebraic and side channel attacks on stream ciphers, as of this writing, this work can be related to similar attacks on block ciphers as they have been researched since Renauld and Francois-Xavier introduced them in 2009 [7]. Authors applied their newly proposed attack against PRESENT block cipher. They proceeded with their attack in two phases. Firstly they transformed PRESENT cipher into a system of algebraic equations and converted this MQ problem into a SAT problem. SAT problem consists of conjunctive normal form (CNF) clauses. Secondly, they subjected an implementation of PRESENT cipher to a partial side channel analysis, using template attack technique [16]. They captured hamming weights at the input and output of all the s-boxes of cipher in a single or few trace measurements. Finally combined CNF clauses from both phases was fed to a SAT solver for satisfiability / assignment. The attack was a success, as they were able to find the key of a 32-round PRESENT in 2.5 seconds only.

Research work on algebraic side channel attacks against block ciphers continued thereafter. It is successfully applied against AES in [17], [18], [19], [20] and [21]. Rich literature is available on dealing with errors in practical side channel attacks as part of algebraic side channel attack technique. Authors in [22] proposed to use pseudo boolean optimisers (PBOT) for optimised solving in presence of errors. An error tolerant technique called multiple deductions-based algebraic side channel attack (MDASCA) was proposed in [23]. Another work to improve error tolerance of this attack used constraint programming compiler in [24].

The popular template attack technique [16] used in extracting side channel information in few (or single) power traces, is also related to this work. Authors developed their work on the assumption that adversary possesses a replica of device which implements the target cipher. Adversary prepares templates based on all power traces due to various key combinations. These templates essentially include noise characteristics as well. A single power trace from the actual device is enough as it can be correlated with one of the templates to reveal the key.

III. Attack Approach

To combine algebraic and side channel attack on a stream cipher, adversary transforms the target cipher into a system of equations through algebraic attack and then incorporates additional equations formed from side channel leakage information into it. Solving this combined set of equations gives the unknown secret key or internal state. Fig 1 displays this attack methodology.

A. Algebraic Attack Phase

For mounting an algebraic attack, sufficient number of output stream bits are captured by XOR of plain text bits with cipher text bits or through some other method. Then system of equations involving unknown secret key or state bits and output stream bits is constructed. Here a low degree annihilator function [5] of the Boolean function under discussion can also be made use of.

Algebraic attack can be targeted either directly against secret key or complete initial state bits. Targeting directly the secret key bits with known IV assumption, reduces the number of unknown variables at one hand, but increases the degree of algebraic equations due to inclusion of initialization cycle

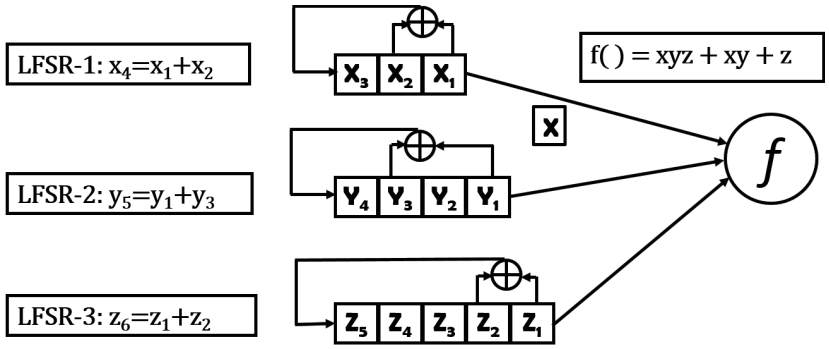

Fig. 2: A Hypothetical Stream Cipher

of the cipher in the attack, on the other hand. Vice versa, targeting complete internal state bits increases the number of unknowns but reduces the degree of equations as initialization cycle would be excluded. If internal state bits are found, secret key can be reached by running the cipher backwards.

In the attack technique proposed in this work, instead of solving the MQ problem, algebraic attack is halted at accomplishment of system of multivariate equations. From here we move to the next phase.

B. Side Channel Attack Phase

This is not a full-fledged side channel attack in which complete key or internal state is targeted. The aim of this phase is to get maximum possible leakage information from the implementation of the target cipher with least possible access. Therefore important prerequisite is to identify available leakage points from cipher's implementation while using the knowledge of the cipher's algorithm so that useful side channel information can be extracted. Most probable leakage points are state registers, inputs and outputs of filter functions. The partial side channel information has to be converted into algebraic equations. Method to convert leakage information into algebraic equations depends upon the leakage model. For example in case of hamming weight leakage model, method of converting leakage information into algebraic equations [25] is as under:

- Hamming weight = $HW(k)$, where $k = (k_1, k_2, ., k_n) \in F_2^n$
- If $HW(k) = x$ then product of any $x + 1$ bits is null.
- Therefore if $HW(k) = 1$ for $k = (k_1, k_2, k_3, k_4)$
- Then $k_1 * k_2 = k_1 * k_3 = k_1 * k_4 = k_2 * k_3 = k_2 * k_4 = k_3 * k_4 = 0$ and $k_1 + k_2 + k_3 + k_4 = 1$

Therefore the output of this phase is a set of few additional algebraic equations obtained from a single or few power trace measurements of the target stream cipher. Amount of information from side channel analysis is directly proportional to the reduction in the complexity of overall solving of combined equations obtained from both phases in the end. However it is important to note that side channel information with errors will make the MQ problem intractable.

C. Combining Equations from both Phases and Solving

Algebraic equations obtained independently from both phases are combined together as one system of equations. This system of equations can be solved by using any appropriate mathematical method / tool. If still the solving is not computationally feasible, one or both of the above mentioned phases can be revisited with different parameters.

IV. Example Attack

Here we explain the application of our proposed attack on a simple hypothetical stream cipher (fig 2) based on linear feedback shift registers (LFSRs) and a nonlinear combiner function, to demonstrate the methodology. With the knowledge of first few bits of the output stream, adversary formulates few multivariate equations by traditional algebraic attack. Then we assume that adversary is able to get exact hamming weights at the input of combiner function $f()$. Lastly adversary adds the information from both phases to resolve the MQ problem, thereby reaching at internal state bits.

A. Algebraic Attack Phase

Adversary acquires seven bits of output stream as 1100111. The degree of combiner function $f()$ is 3. Following 2-degree annihilator functions of $f()$ are calculated:

- $g_1() = 1 + z + x + xz$.
- $g_2() = 1 + y + z + yz$.
- $g_3() = x + y + xz + yz$.
- There is no annihilator of $1 + f()$.

Next, following equations can be calculated at first seven clocks, involving unknown state bits and known output bits, from $g()$'s and $f()$:

- Equations against $g_1()$:
  - At t=0: $1 + z_1 + x_1 + x_1z_1 = 0$
  - At t=1: $1 + z_2 + x_2 + x_2z_2 = 0$
  - At t=4: $1 + z_5 + x_5 + x_5z_5 = 0$
  - At t=5: $1 + z_6 + x_6 + x_6z_6 = 0$
  - At t=6: $1 + z_7 + x_7 + x_7z_7 = 0$
- Equations against $g_2()$:
  - At t=0: $1 + y_1 + z_1 + y_1z_1 = 0$
  - At t=1: $1 + y_2 + z_2 + y_2z_2 = 0$
  - At t=4: $1 + y_5 + z_5 + y_5z_5 = 0$

- At t=5: $1 + y_6 + z_6 + y_6z_6 = 0$
- At t=6: $1 + y_7 + z_7 + y_7z_7 = 0$

- Equations against $g_3()$:
  - At t=0: $x_1 + y_1 + x_1z_1 + y_1z_1 = 0$
  - At t=1: $x_2 + y_2 + x_2z_2 + y_2z_2 = 0$
  - At t=4: $x_5 + y_5 + x_5z_5 + y_5z_5 = 0$
  - At t=5: $x_6 + y_6 + x_6z_6 + y_6z_6 = 0$
  - At t=6: $x_7 + y_7 + x_7z_7 + y_7z_7 = 0$
- Equations against $f()$:
  - At t=0: $x_1y_1z_1 + x_1y_1 + z_1 = 1$
  - At t=1: $x_2y_2z_2 + x_2y_2 + z_2 = 1$
  - At t=2: $x_3y_3z_3 + x_3y_3 + z_3 = 0$
  - At t=3: $x_4y_4z_4 + x_4y_4 + z_4 = 0$
  - At t=4: $x_5y_5z_5 + x_5y_5 + z_5 = 1$
  - At t=5: $x_6y_6z_6 + x_6y_6 + z_6 = 1$
  - At t=6: $x_7y_7z_7 + x_7y_7 + z_7 = 1$

B. Side Channel Attack Phase

Through side channel attack adversary finds out hamming weights (HW) at the input of function $f()$ as follows:

- At $t = 0$, $HW = 3$: $x_1 = y_1 = z_1 = 1$
- At $t = 1$, $HW = 2$: $x_2y_2z_2 = 0$
- At $t = 2$, $HW = 1$: $x_3y_3 = y_3z_3 = x_3z_3 = x_3y_3z_3 = 0$
- At $t = 3$, $HW = 1$: $x_4y_4 = y_4z_4 = x_4z_4 = x_4y_4z_4 = 0$
- At $t = 4$, $HW = 1$: $x_5y_5 = y_5z_5 = x_5z_5 = x_5y_5z_5 = 0$
- At $t = 5$, $HW = 2$: $x_6y_6z_6 = 0$
- At $t = 6$, $HW = 3$: $x_7 = y_7 = z_7 = x_7y_7 = x_7z_7 = y_7z_7 = x_7y_7z_7 = 1$

C. Combining Equations from both Phases and Solving

- Combining equations at t=0 from both phases: $x_1 = y_1 = z_1 = 1$
- Combining equations at t=1 from both phases: we are unable to find any value.
- Combining equations at t=2 from both phases: $z_3 = 0$
- Combining equations at t=3 from both phases: $z_4 = 0$
- Combining equations at t=4 from both phases: $1 + z_5 + x_5 = 0, 1 + y_5 + z_5 = 0, x_5 + y_5 = 0$
- Either $x_5 = y_5 = 1, z_5 = 0$ Or $x_5 = y_5 = 0, z_5 = 1$ But as $HW = 1$: $x_5 = y_5 = 0$ and $z_5 = 1$ is correct.
- Combining equations at t=5 from both phases: we are unable to find any value.
- Combining equations at t=6 from both phases: $x_7 = y_7 = z_7 = 1$
- From LFSR-1 equation $x_4 = x_1 + x_2$ and already calculated Xs($x_1 = 1, x_5 = 0, x_7 = 1$): $x_2 = x_3 = 0$
- From LFSR-2 equation $y_5 = y_1 + y_3$ and already calculated Ys($y_1 = 1, y_5 = 0, y_7 = 1$): $y_3 = 1$
- From LFSR-3 equation $z_6 = z_1 + z_2$ and already calculated Zs ($z_1 = 1, z_3 = 0, z_4 = 0, z_5 = 1, z_7 = 1$): $z_2 = 1$

Initial states of LFSR-1&3 are completely known however for LFSR-2, y_2 and y_4 are unknown yet. As adversary knows the hamming weights at first seven clocks, so y_2 and y_4 is calculated as follows:

- At $t = 1, x_2 = 0, y_2 =?, z_2 = 1$ and $HW = 2$ therefore $y_2 = 1$
- At $t = 3, x_4 = x_1 + x_2 = 1, z_4 = 0$ and $HW = 1$ therefore $y_4 = 0$

Therefore, all the internal state bits are now known. Same methodology as in this example attack can be applied on real stream ciphers based as well, except the difference that the solving will have to be carried out with some mathematical tool.

V. Conclusion and Future Work

This work proposes to augment algebraic attacks on stream ciphers with partial side channel leakage information. The efficacy of this attack combination has been demonstrated with a trivial example attack on a hypothetical stream cipher. In the example, equations obtained from pure algebraic technique have all internal states of LFSRs as unknowns. The additional information coming from side channel analysis is also converted to algebraic equations. When these additional equations are added it becomes easier to resolve the system.

Algebraic and side channel attacks are successfully being applied on block ciphers in combination since 2009. On stream ciphers, both these attacks are being applied in isolation as yet. Algebraic attacks against stream ciphers with nonlinear update are not computationally feasible. The complexity of algebraic attacks can be considerably reduced by adding partial information from side channel analysis as the system of equations is made further overdefined. In future we intend applying algebraic side channel attacks on real world stream ciphers in continuation to this research work.

References

[1] A.Kipnis, A. Shamir,*"Cryptanalysis of the HFE Public Key Cryptosystem by Relinearization."* Crypto99, LNCS 142,144. Springer-Verlag, pp.19-31.

[2] N. Courtois, A. Klimov, J. Patarin, A. Shamir,*"Efficient Algorithms for solving Overdefined System of Multivariate Polynomial Equations."* Eurocrypt2000, LNCS 1807. Springer-Verlag, pp. 392-407.

[3] Nicolas T. Courtois, Josef Pieprzyk,*"Cryptanalysis of Block Cipher with Overdefined System of Equations."* Asiacrypt 2002, Volume 2501. Springer-Verlag, pp. 267-287.

[4] Buchberger, Bruno, and Franz Winkler,*"Grobner bases and applications."* Vol. 251. Cambridge University Press, 1998.

[5] Courtois, Nicolas T,*"Fast algebraic attacks on stream ciphers with linear feedback."* Annual International Cryptology Conference. Springer Berlin Heidelberg, 2003.

[6] Afzal, Mehreen, and Ashraf Masood,*"Algebraic cryptanalysis of a nlfsr based stream cipher."* Information and Communication Technologies: From Theory to Applications, 2008. ICTTA 2008. 3rd International Conference on. IEEE, 2008.

[7] Renauld, Mathieu, and Francois-Xavier Standaert,*"Algebraic side-channel attacks."* International Conference on Information Security and Cryptology. Springer Berlin Heidelberg, 2009.

[8] Soos, Mate,*"Grain of salt - an automated way to test stream ciphers through SAT solvers."* Tools. Vol. 10. 2010.

[9] Afzal, Mehreen, and Ashraf Masood,*"Algebraic Cryptanalysis of Stream Ciphers with Non-linear Update (thesis)."* National University of Sciences and Technology, Pakistan, 2008.

[10] Quedenfeld, Frank-M., and Christopher Wolf,*"Advanced Algebraic Attack on Trivium."* International Conference on Mathematical Aspects of Computer and Information Sciences. Springer International Publishing, 2015.

[11] Datta, Pratish, Dibyendu Roy, and Sourav Mukhopadhyay,*"A probabilistic algebraic attack on the grain family of stream ciphers."* International Conference on Network and System Security. Springer International Publishing, 2014.

[12] Gierlichs, Benedikt, et al,*"Susceptibility of eSTREAM candidates towards side channel analysis."* Proceedings of SASC (2008): 123-150.

[13] Strobel, Daehyun, Ing Christof Paar, and M. Kasper. *"Side channel analysis attacks on stream ciphers."*, Masterarbeit Ruhr-Universitat Bochum (2009).

[14] Jia, Yanyan, et al. *"Correlation power analysis of Trivium."*, Security and Communication Networks 5.5 (2012): 479-484.

[15] Fischer, Wieland, et al. *"Differential power analysis of stream ciphers."*, Cryptographers' Track at the RSA Conference. Springer Berlin Heidelberg, 2007.

[16] Chari, Suresh, Josyula R. Rao, and Pankaj Rohatgi,*"Template attacks."* International Workshop on Cryptographic Hardware and Embedded Systems. Springer Berlin Heidelberg, 2002.

[17] Renauld, Mathieu, Franois-Xavier Standaert, and Nicolas Veyrat-Charvillon, *"Algebraic side-channel attacks on the AES: Why time also matters in DPA."*, Cryptographic Hardware and Embedded Systems-CHES 2009. Springer Berlin Heidelberg, 2009. 97-111.

[18] Mohamed, Mohamed Saied Emam, et al. *"Improved algebraic side-channel attack on AES."*, Hardware-Oriented Security and Trust (HOST), 2012 IEEE International Symposium on. IEEE, 2012.

[19] Oren, Yossef, and Avishai Wool.*"Tolerant Algebraic Side-Channel Analysis of AES."*, IACR Cryptology ePrint Archive 2012 (2012): 92.

[20] Oren, Yossef, Ofir Weisse, and Avishai Wool. *"Practical template-algebraic side channel attacks with extremely low data complexity."*, Proceedings of the 2nd International Workshop on Hardware and Architectural Support for Security and Privacy. ACM, 2013.

[21] Oren, Yossef, and Avishai Wool. *"Side-channel cryptographic attacks using pseudo-boolean optimization."*, Constraints 21.4 (2016): 616-645.

[22] Oren, Yossef, et al. *"Algebraic side-channel analysis in the presence of errors."*, International Workshop on Cryptographic Hardware and Embedded Systems. Springer Berlin Heidelberg, 2010.

[23] Zhao, Xinjie, et al. *"MDASCA: an enhanced algebraic side-channel attack for error tolerance and new leakage model exploitation."*, International Workshop on Constructive Side-Channel Analysis and Secure Design. Springer Berlin Heidelberg, 2012.

[24] Song, Ling, et al. *"Error-Tolerant Algebraic Side-Channel Attacks Using BEE."*, International Conference on Information and Communications Security. Springer International Publishing, 2014.

[25] Carlet, Claude, et al,*"Analysis of the algebraic side channel attack."* Journal of Cryptographic Engineering 2.1 (2012): 45-62.